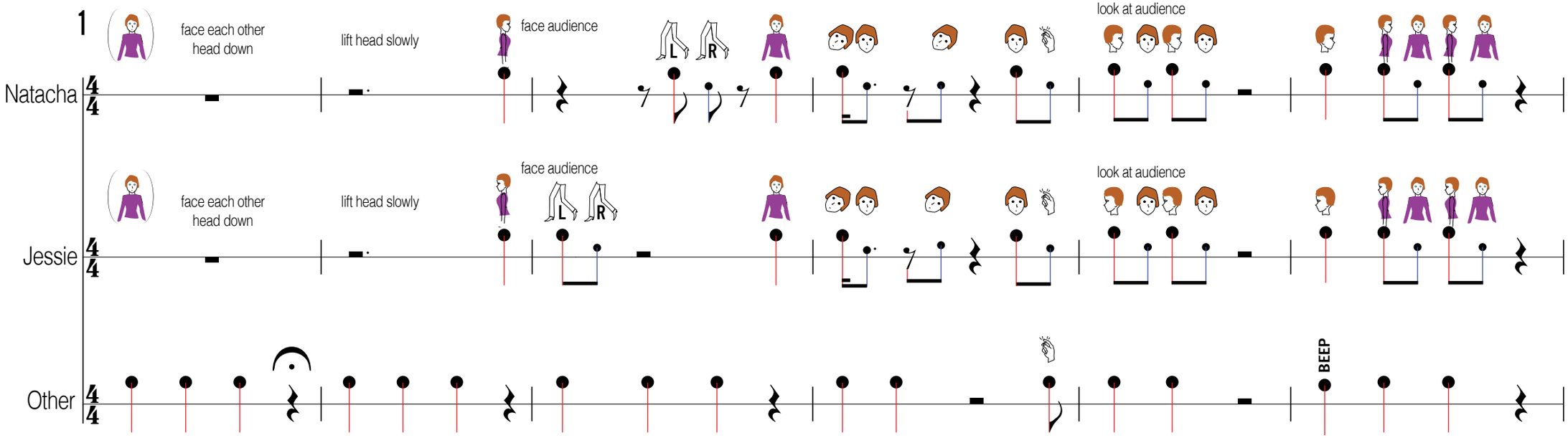
1
face each other
head down
lift head slowly
face audience
look at audience
Natacha
Jessie
Other
L
R
BEEP

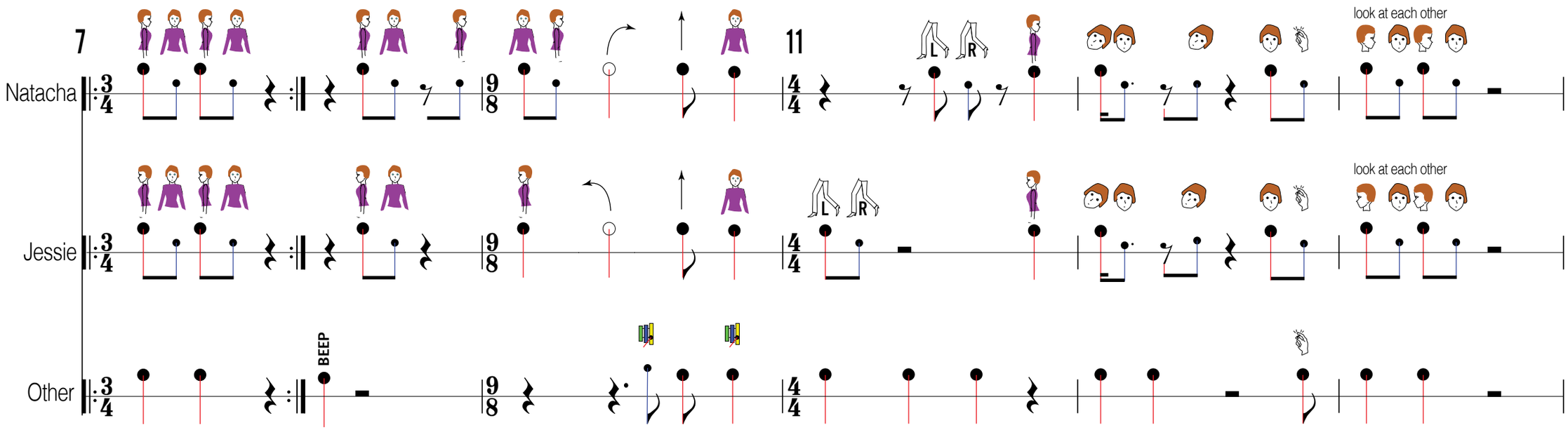
7
11
look at each other
Natacha
Jessie
Other
L
R
BEEP

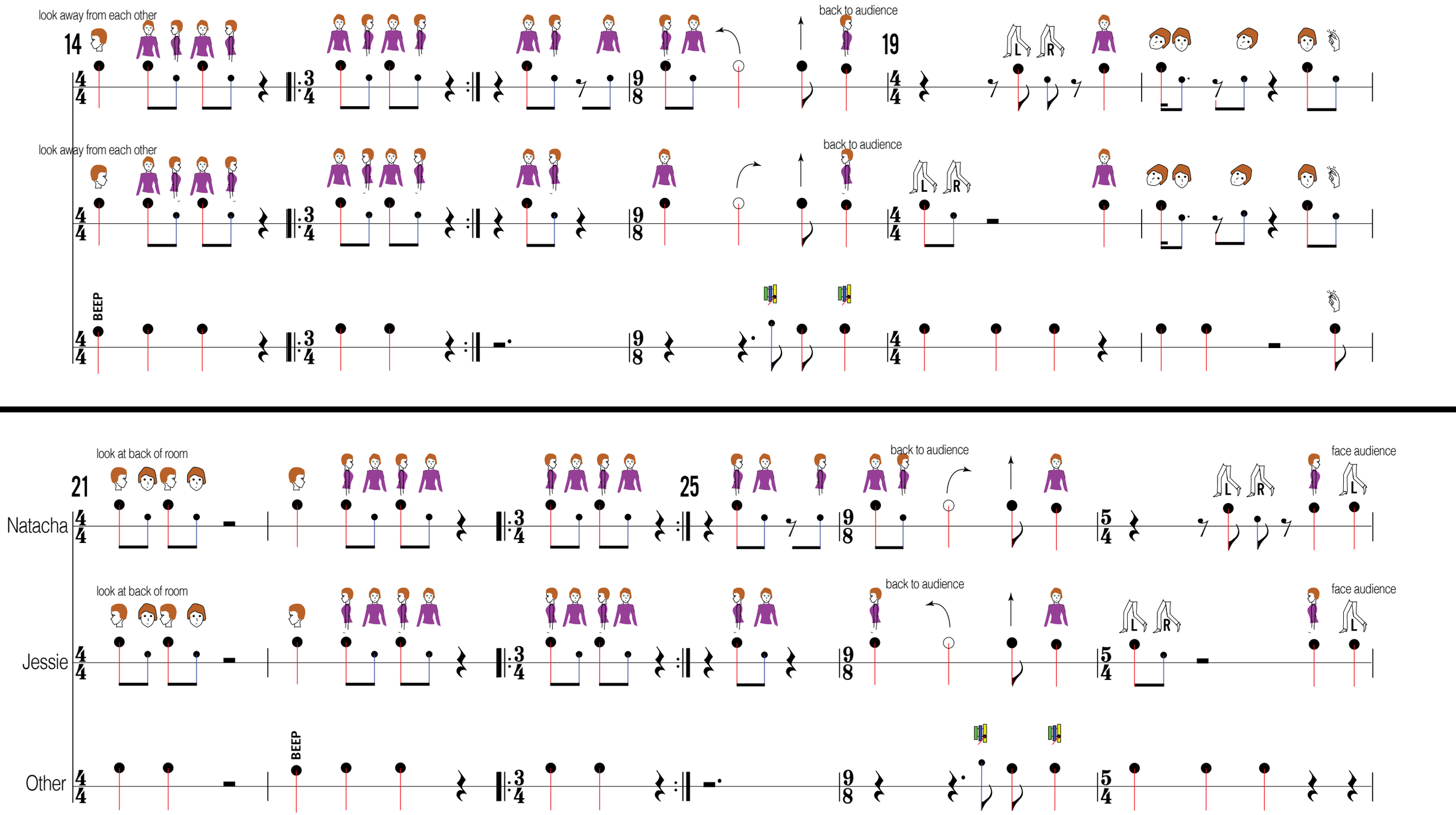
look away from each other
14
back to audience
19
L
R
look away from each other
back to audience
L
R
BEEP
look at back of room
21
back to audience
face audience
25
Natacha
L
R
L
look at back of room
back to audience
face audience
Jessie
L
R
L
BEEP
Other

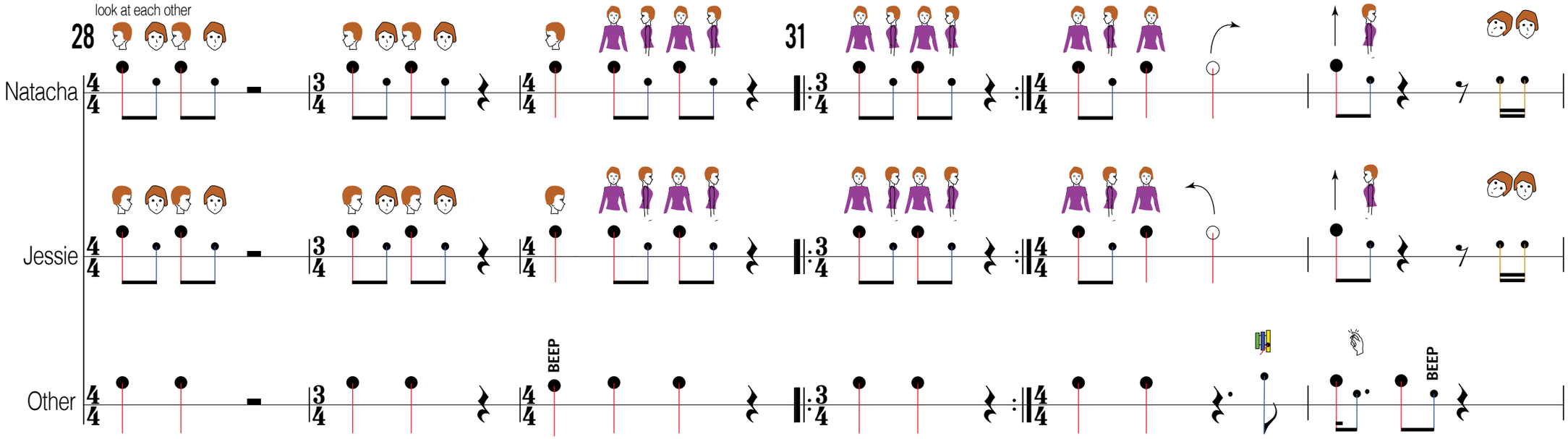
look at each other
28
31
Natacha
Jessie
Other
BEEP
BEEP